YAKIMA®

FrontLoader
Instructions

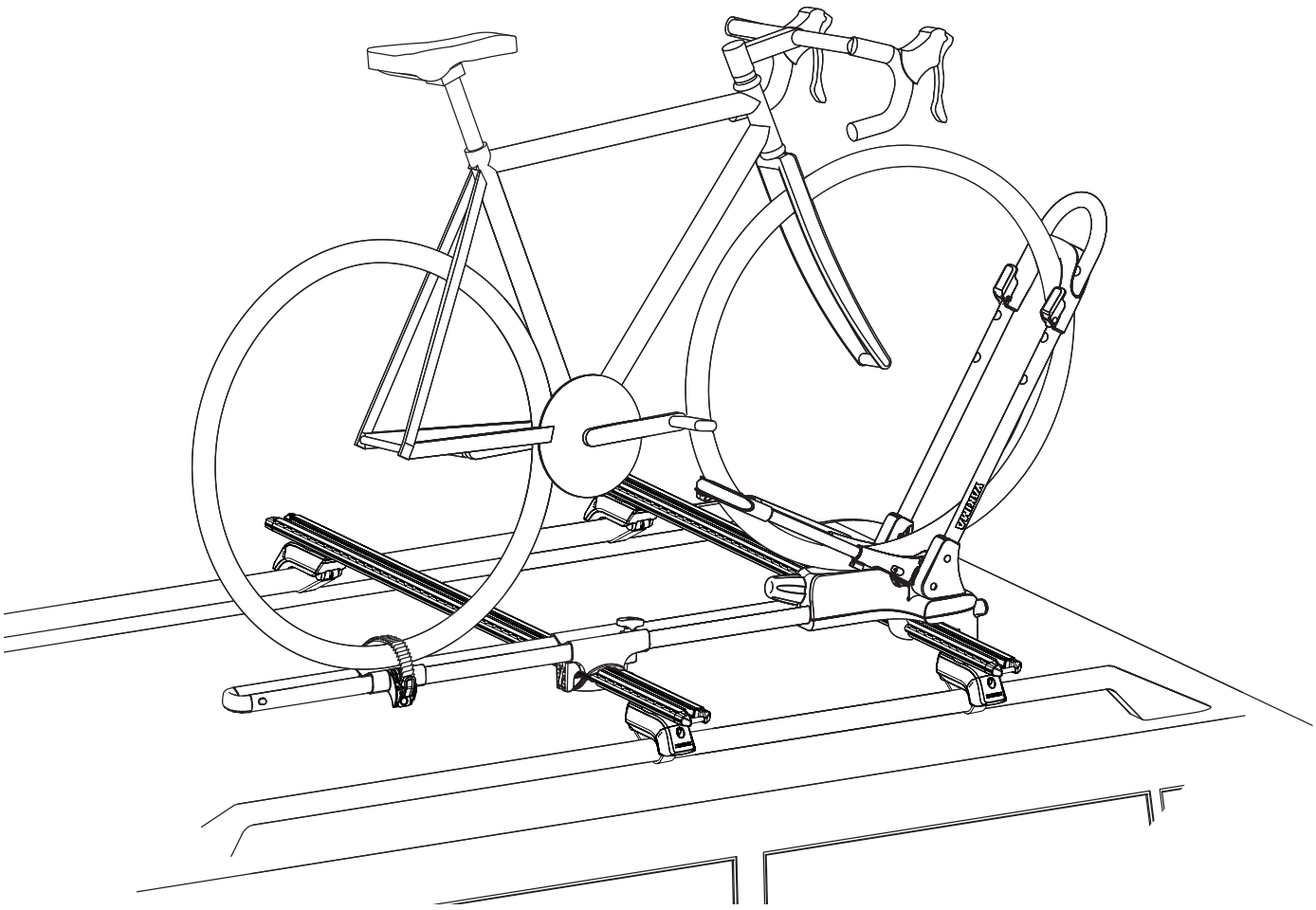

KIT CONTENTS

CROSSBARS SOLD SEPARATELY

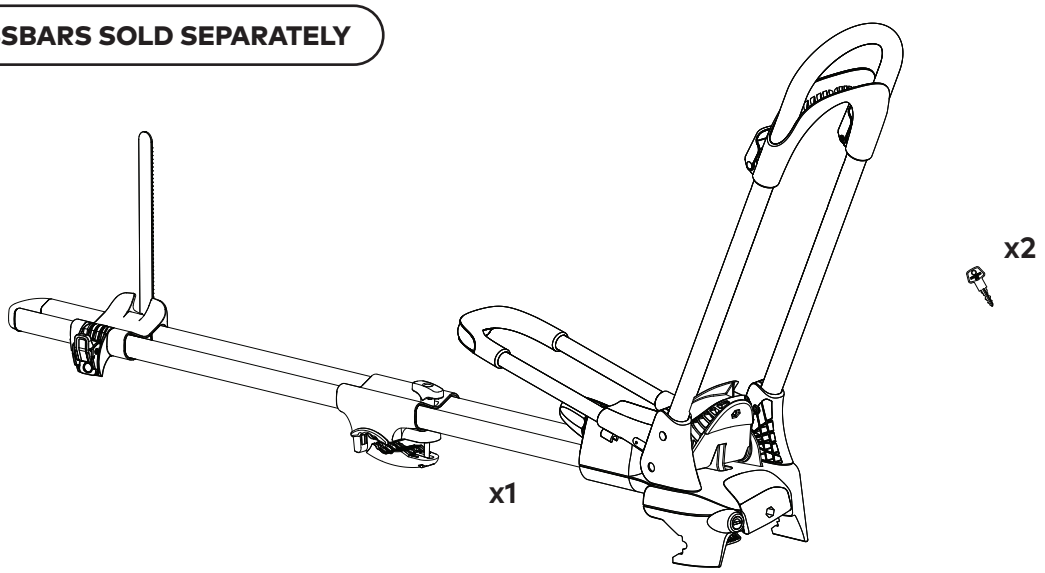

FIRST TIME INSTALLATION

- Please read instructions carefully before installation.
- Check the contents of kit. Contact your YAKIMA dealer if any parts appear missing or damaged.
- Clean your roof rack/platform prior to fitting the YAKIMA FrontLoader.
- Place these instructions in the vehicle's glove box after installation is complete.

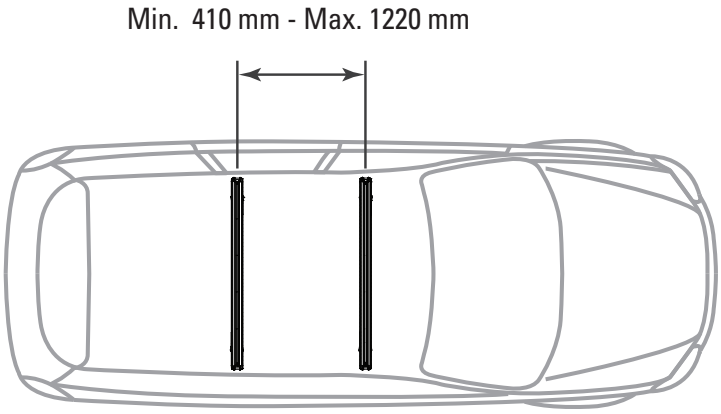

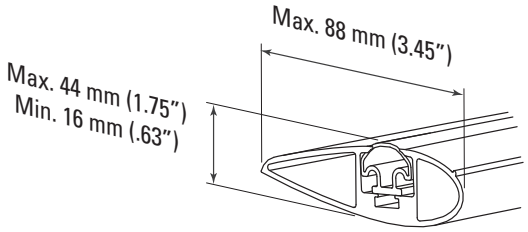

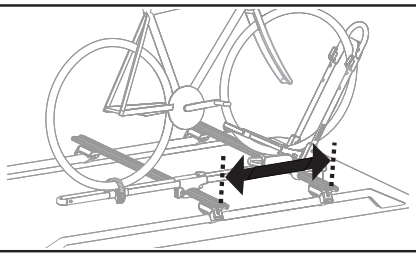	
410mm - 460mm	13.6Kg / 🚲 2x 🚲 MAX.
460mm - 1220mm	18.1Kg / 🚲

INSTALLATION

1

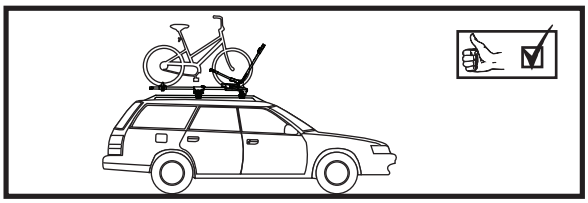

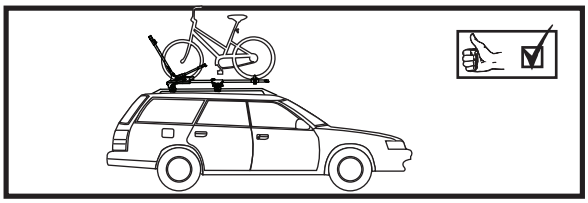

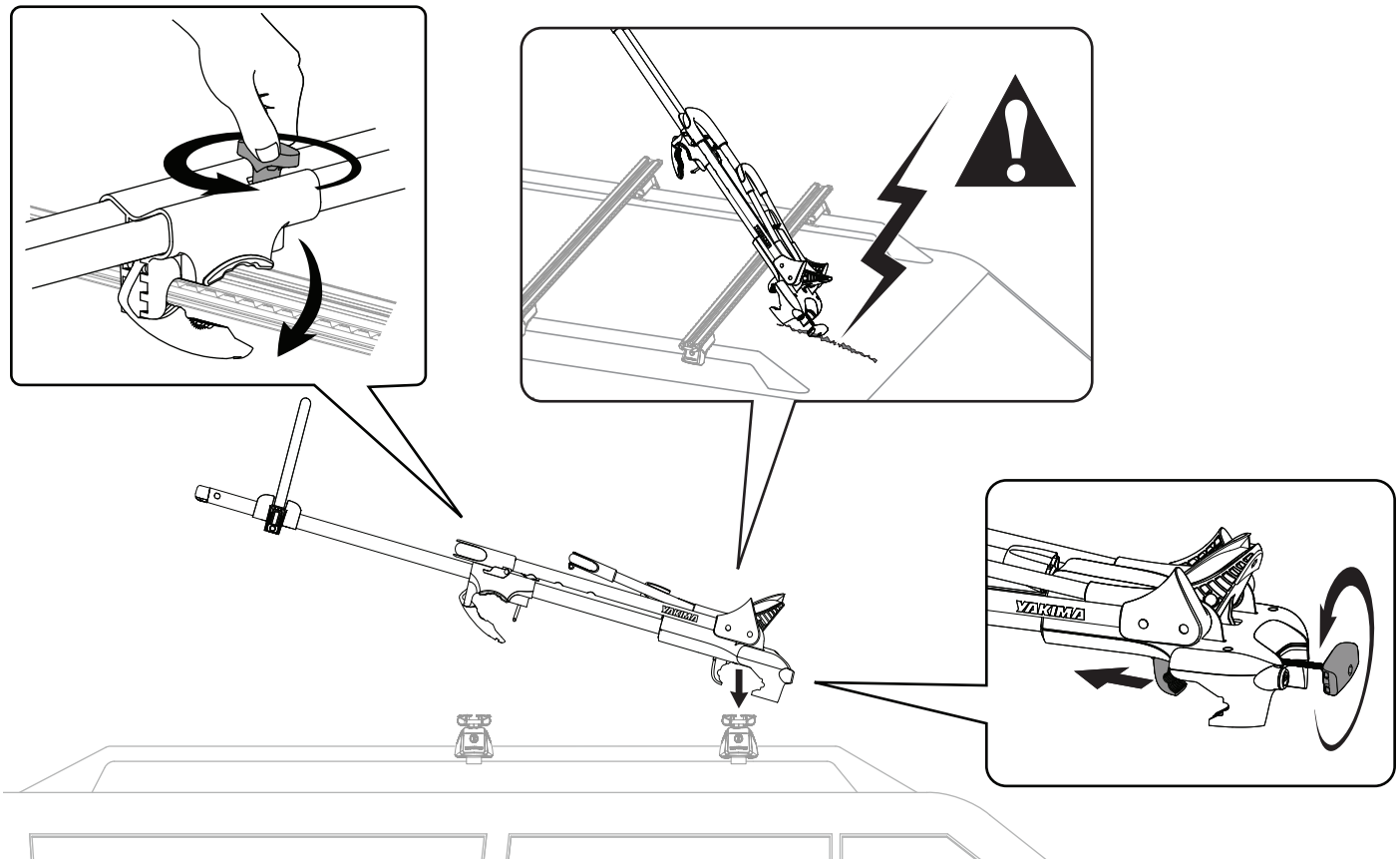

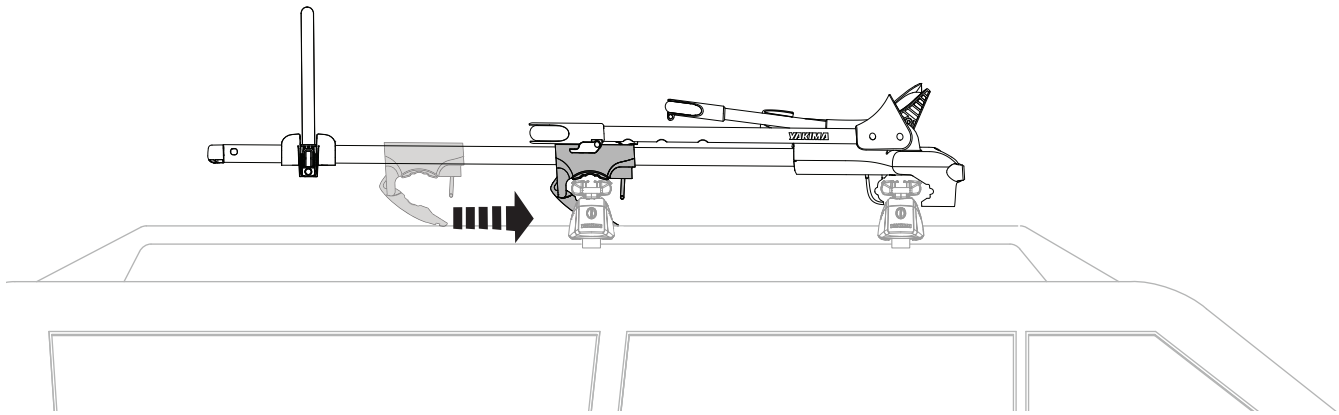

2

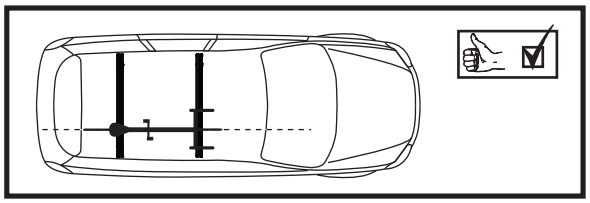

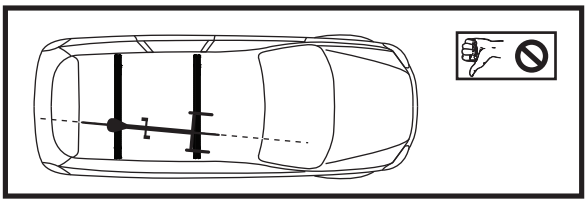

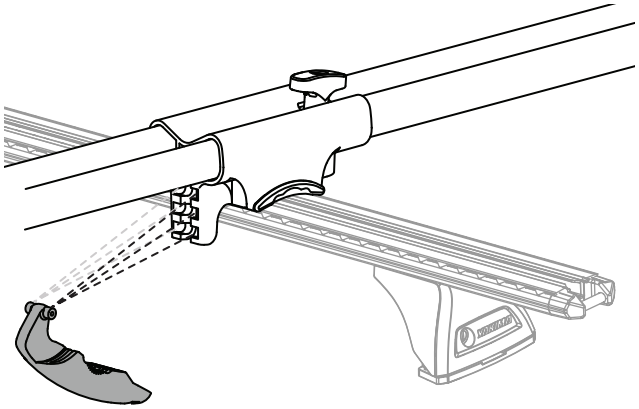

Choose the best position for most secure grip.

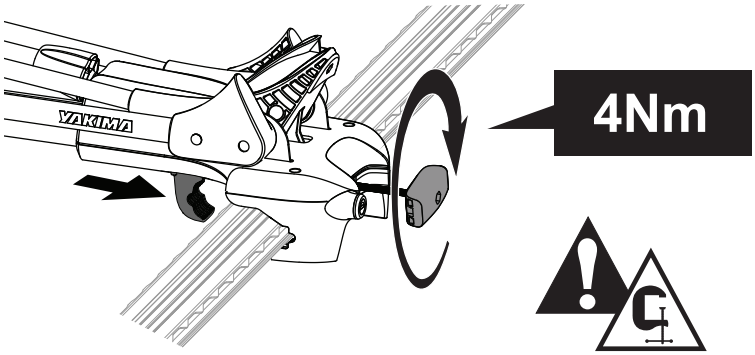

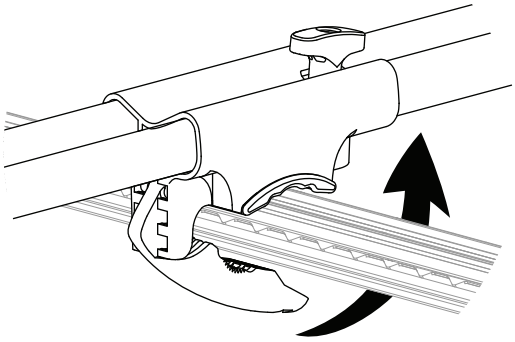

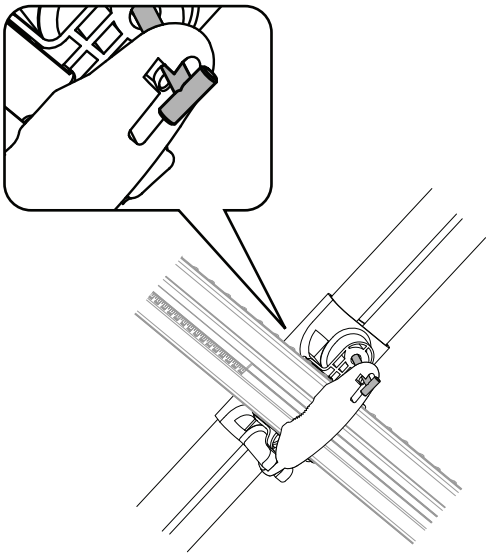

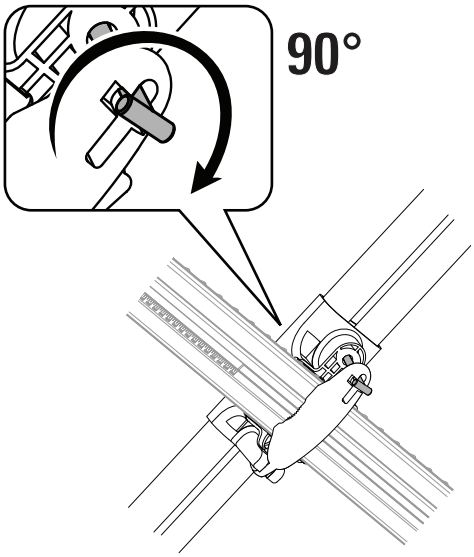

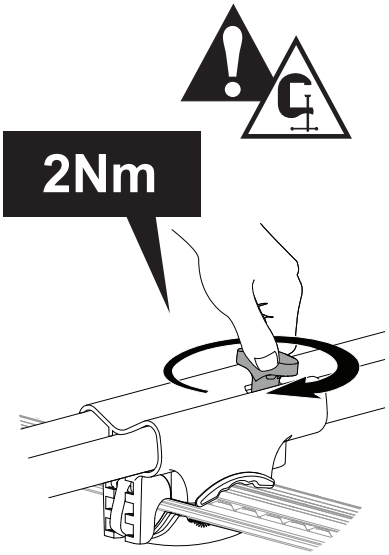

OPTIONAL

- Orient buckle for easiest access when loading or unloading.

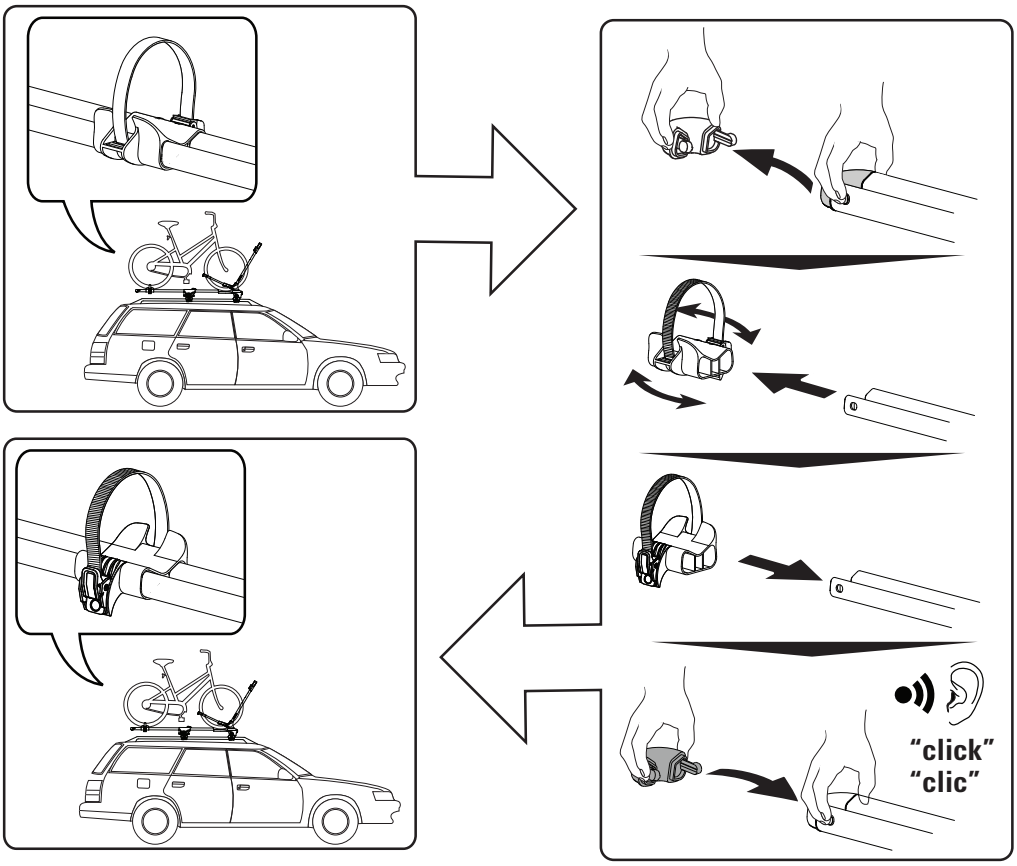

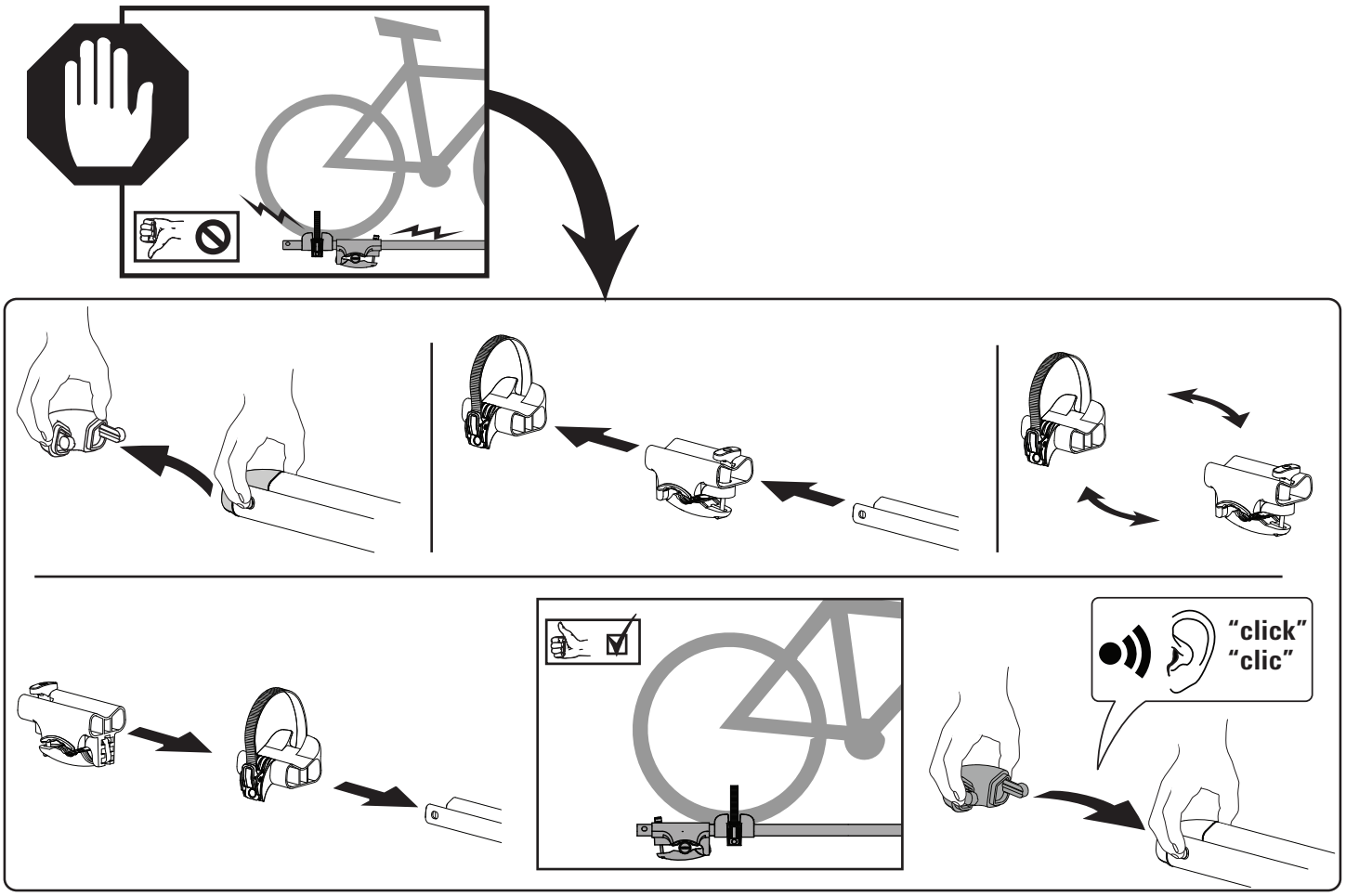

3

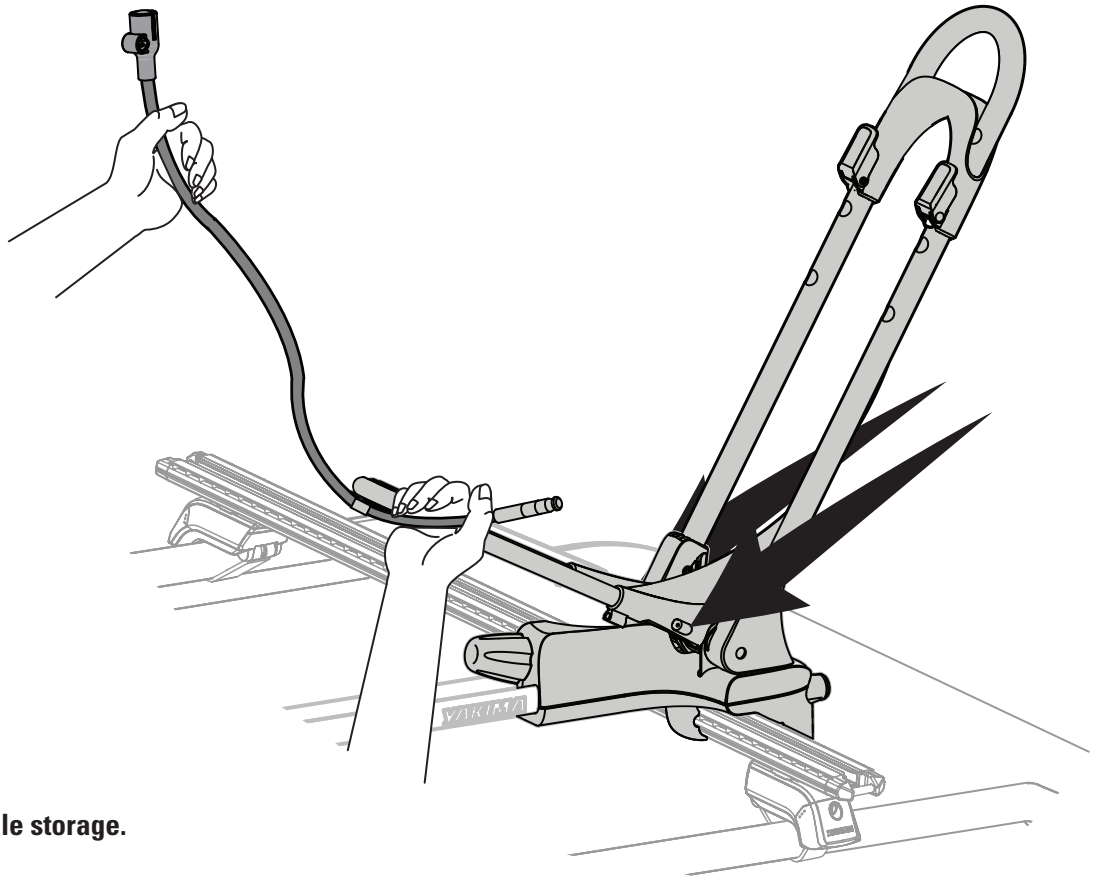

Lock cable storage.

NOTE: Front knob must be in horizontal position to lock.

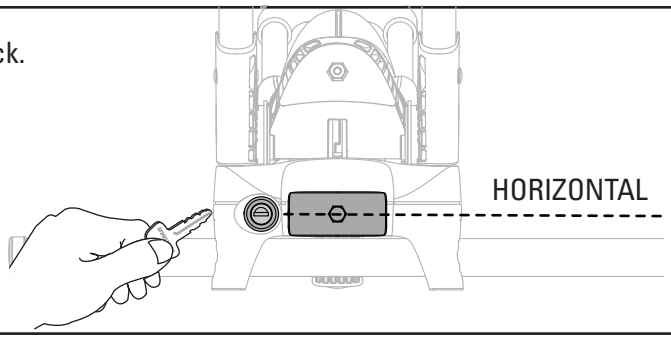

LOADING

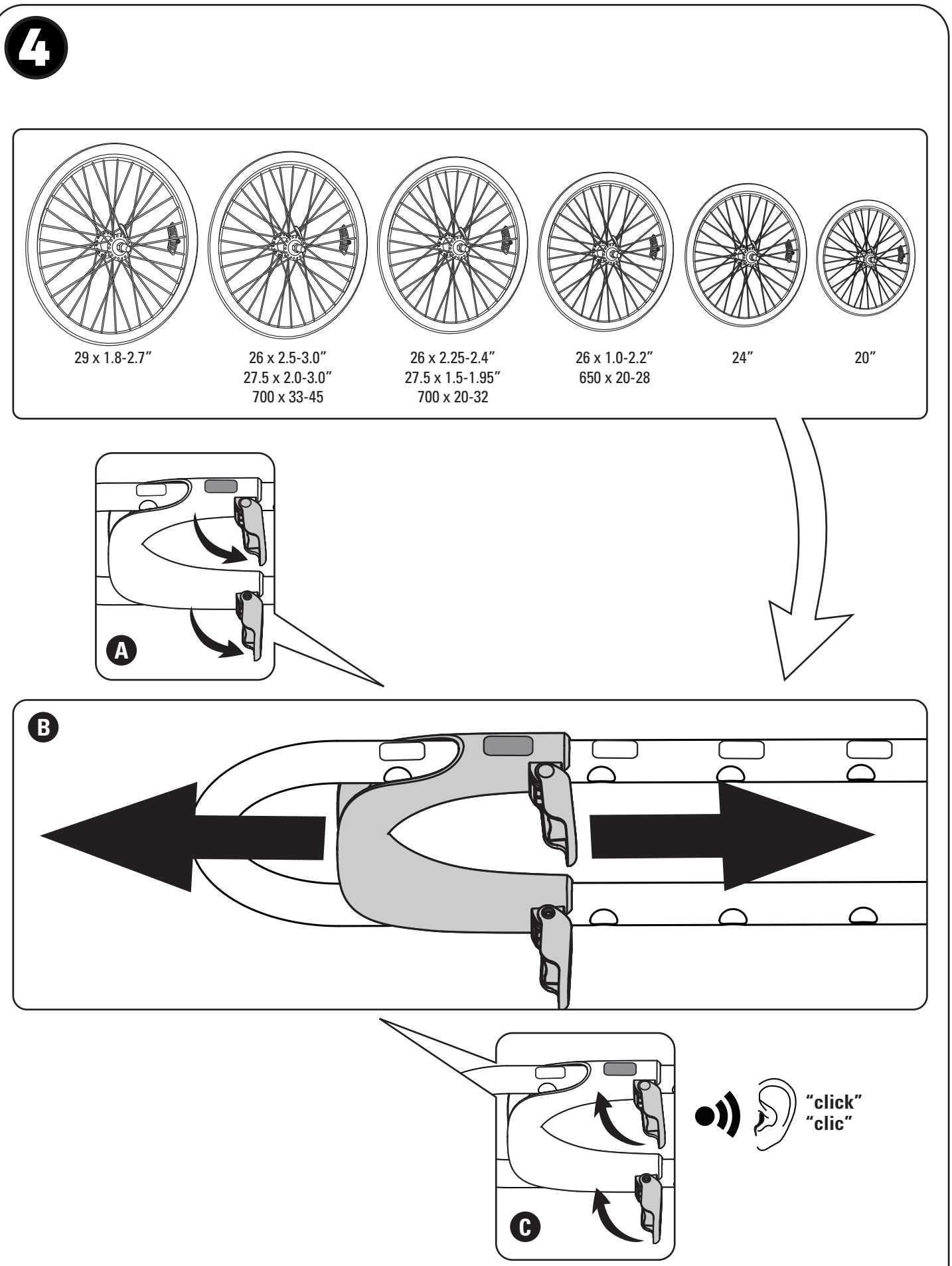
4
29 x 1.8-2.7″
26 x 2.5-3.0″
27.5 x 2.0-3.0″
700 x 33-45
26 x 2.25-2.4″
27.5 x 1.5-1.95″
700 x 20-32
26 x 1.0-2.2″
650 x 20-28
24″
20″
A
B
C
“click”
“clic”

5

Tyre must be fully inflated.

3Nm

6

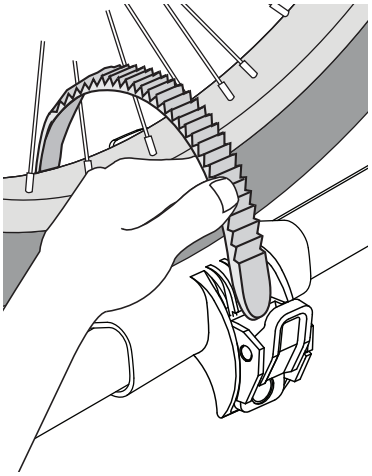

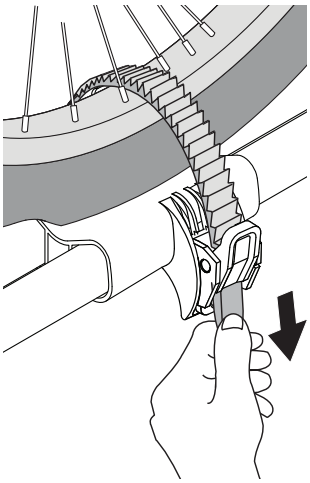

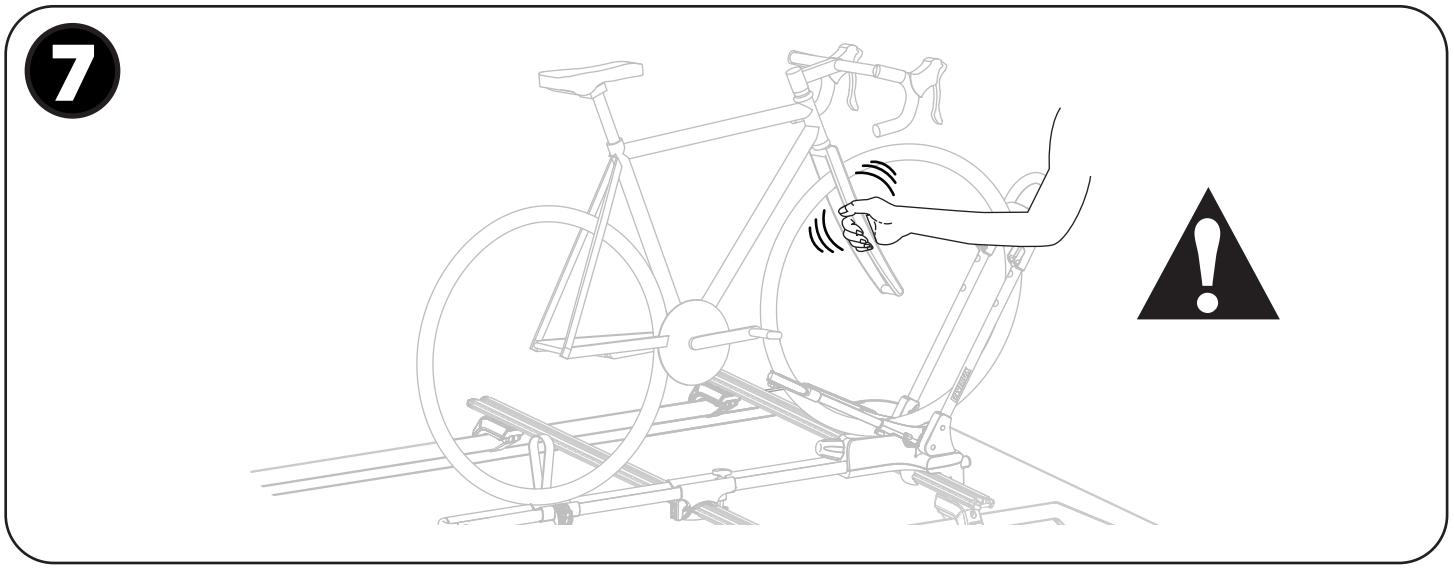

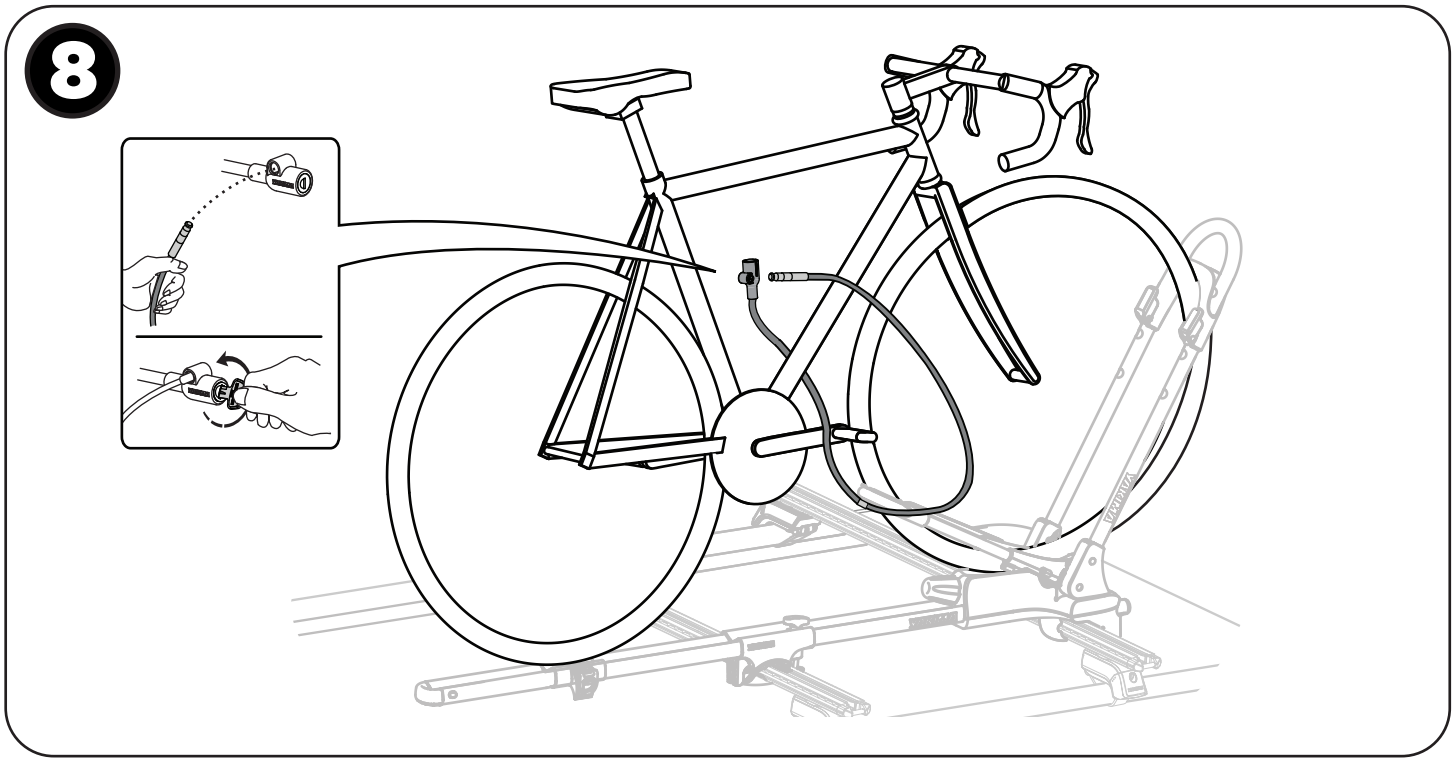

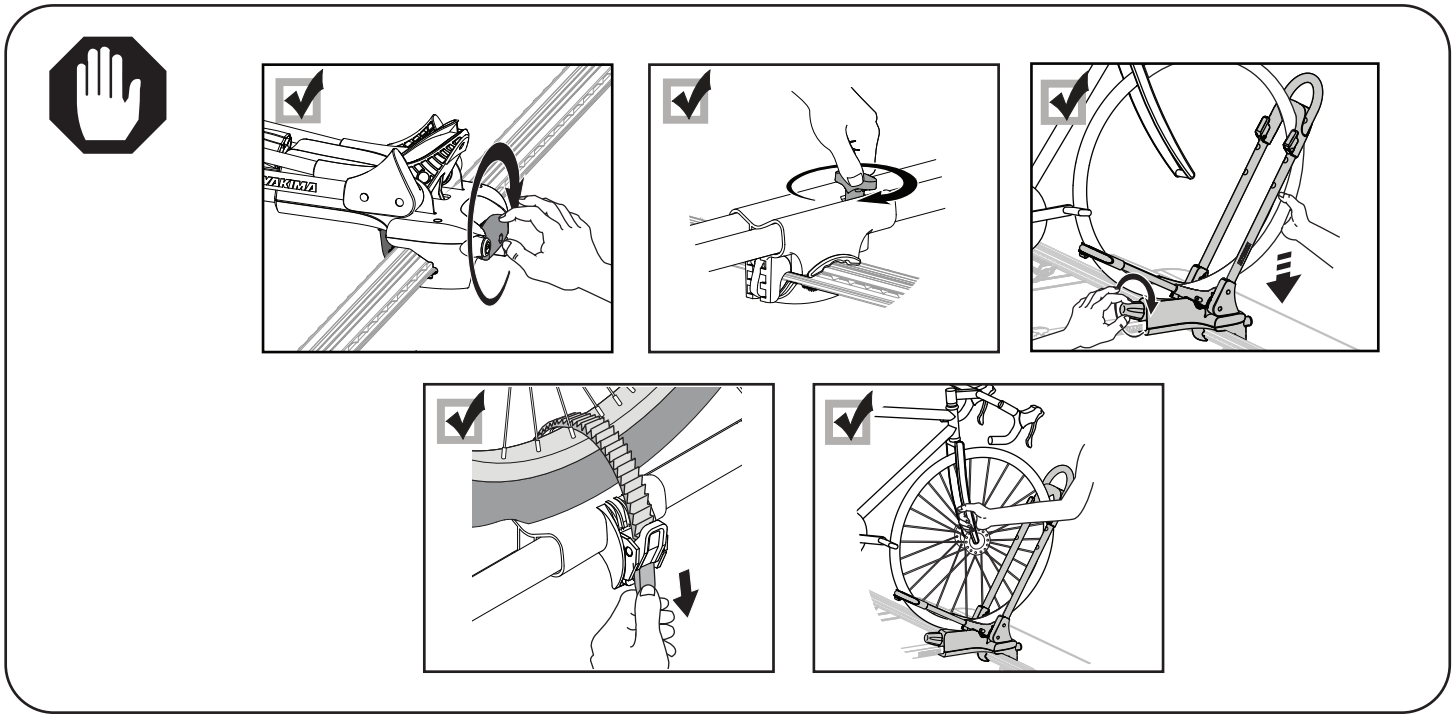

UNLOADING

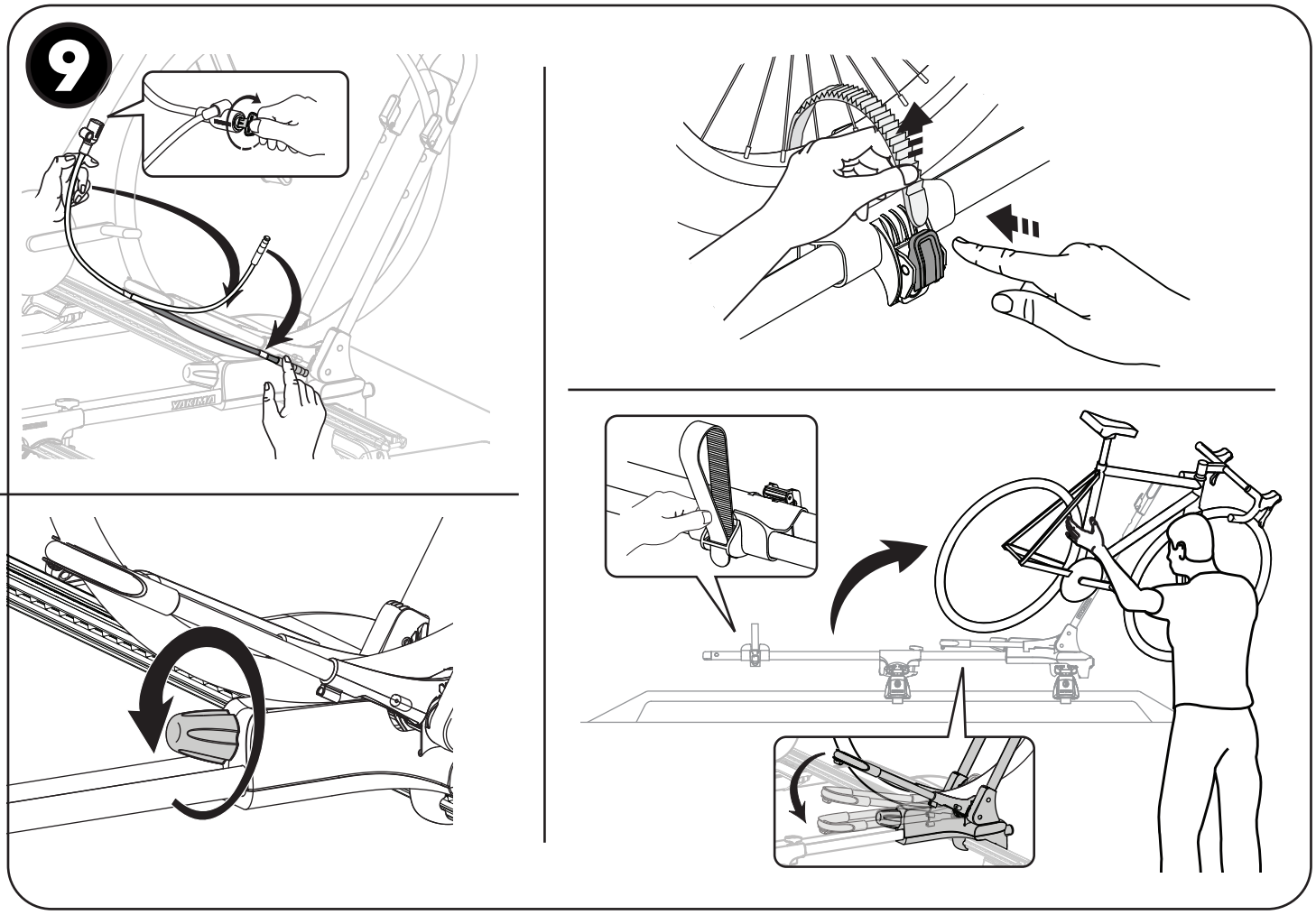

REMOVAL

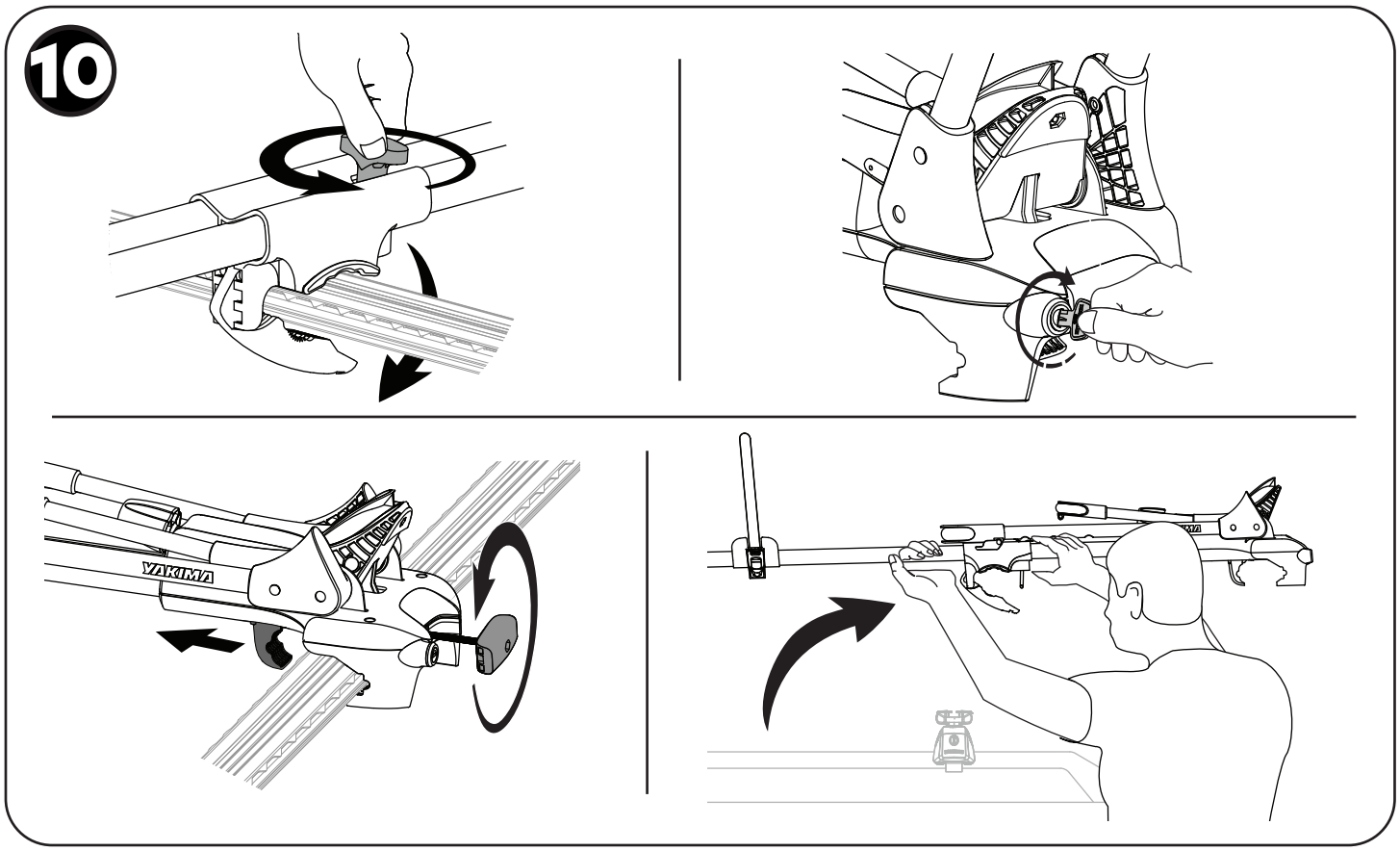

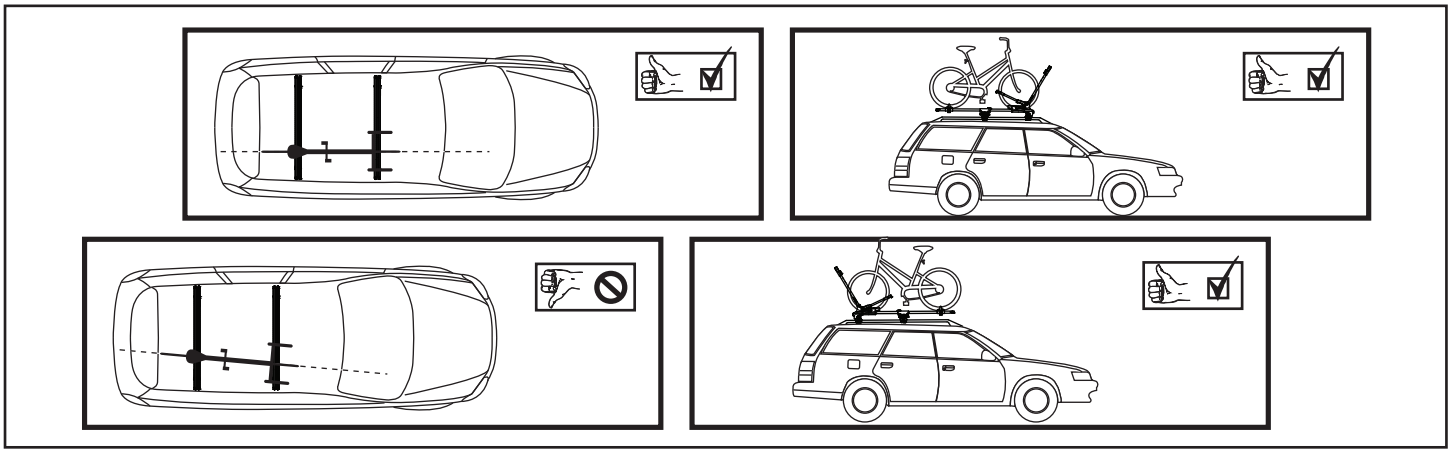

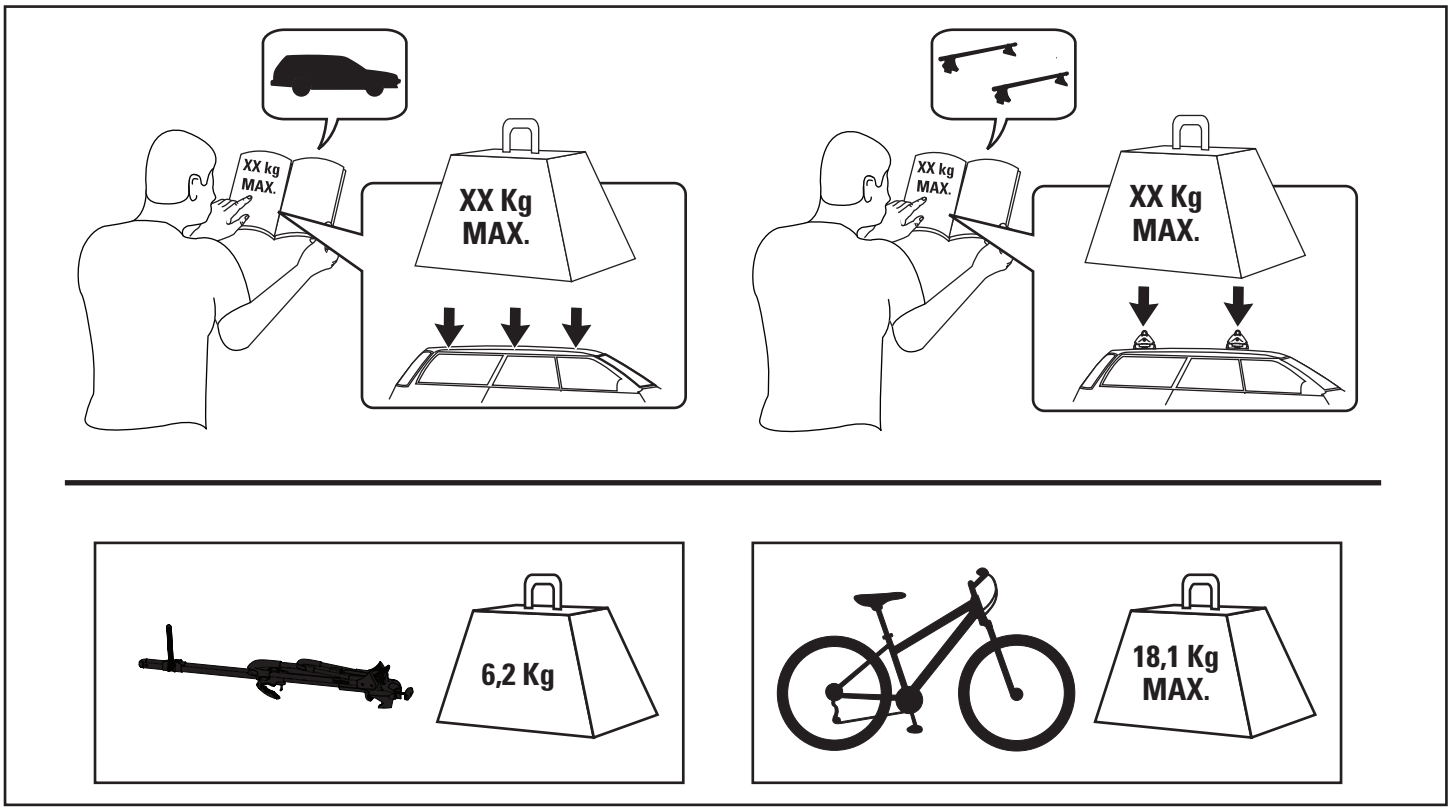
XX kg
MAX.
XX Kg
MAX.
XX kg
MAX.
XX Kg
MAX.
6,2 Kg
18,1 Kg
MAX.

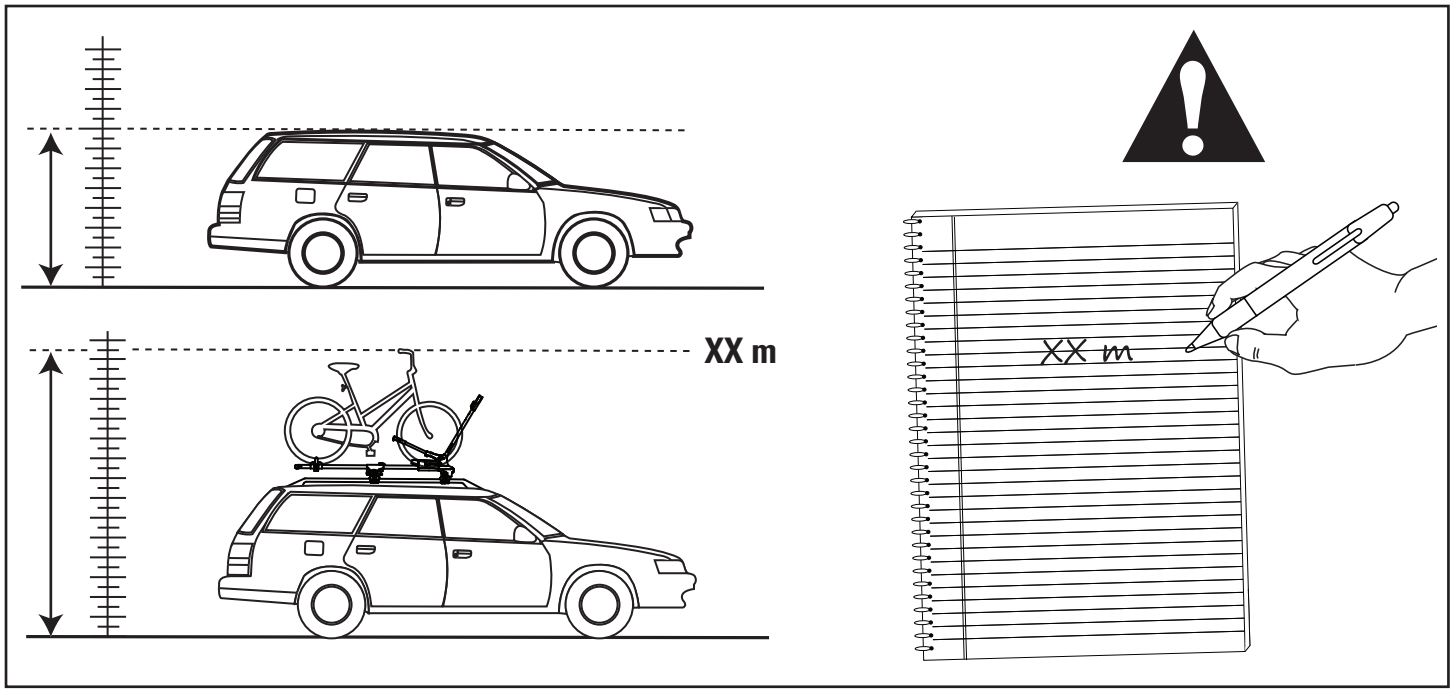
XX m
XX m

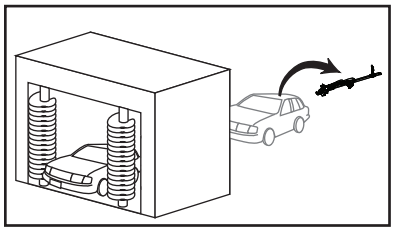

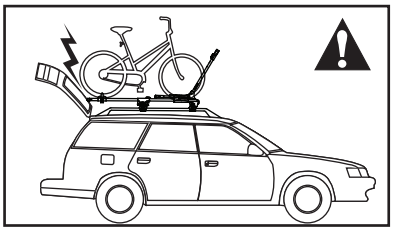

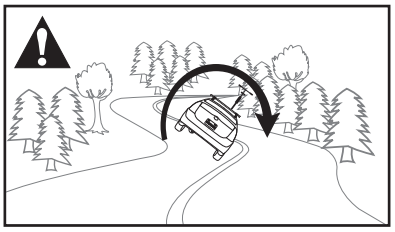

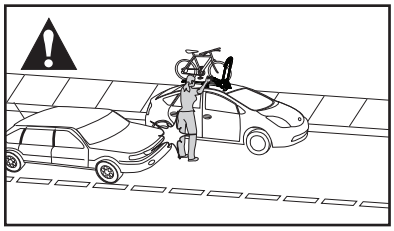

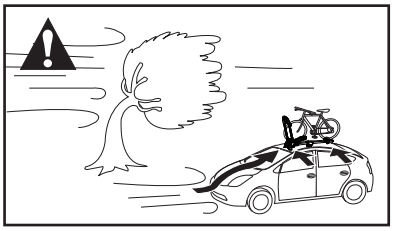

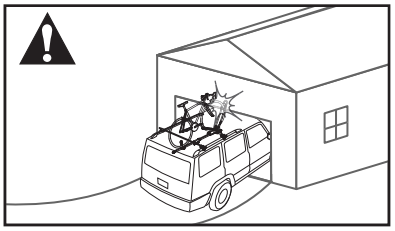

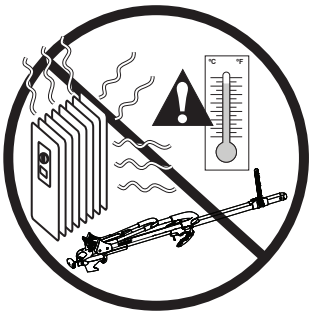
°C
°F

This page intentionally left blank

www.yakima.com.au
www.yakima.co.nz
www.yakima.com
www.yakima.eu

YAKIMA AUSTRALIA PTY LTD
17 Hinkler Court
Brendale, QLD 4500
Australia
1800 143 548
yakimaglobal.com

YAKIMA PRODUCTS, INC.
4101 Kruse Way
Lake Oswego, OR
97035-2541
USA
888 925 4621
yakima.com/support

ALL CONTENT SUBJECT TO YAKIMA AUSTRALIA PTY LTD COPYRIGHT © 2024