HITCH TYPE & COMPATIBILITY

1 WHAT SIZE IS MY HITCH?

2" RECEIVER

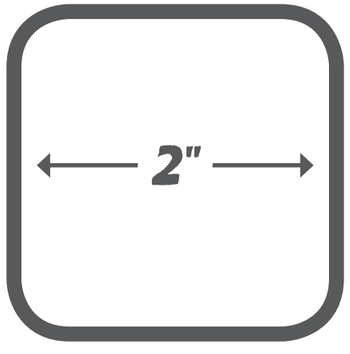

1.25" RECEIVER

NO RULER NEEDED, THESE ARE THE ACTUAL SIZE

2 WHAT CLASS IS MY HITCH?

- Check the sticker on your hitch to determine its class.
- If there is no sticker, don't fear, we can still find the perfect hitch rack that will fit your car. If your receiver is 1.25" it is either a Class I or II, if it's 2" it is a Class III or IV. Choose a hitch rack that fits your receiver and then double-check the "Hitch Fit Tips" on the next page to ensure the proper fit.

3 DETERMINE WHAT STYLE HITCH RACK YOU WANT

TILT

Holds bikes by the frame and tilts down to allow rear-of-vehicle access.

Capacity: 2, 3, 4 or 5 bikes

SWING

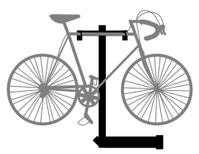

Holds bikes by the frame and allows rear-of-vehicle access when fully loaded.

Capacity: 4 bikes

TRAY

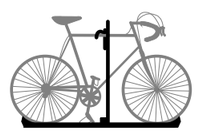

Holds bikes by the wheels and accommodates any frame style, including downhill mountain bikes.

Capacity: 2 or 4 bikes

4 CHOOSE YOUR HITCH RACK

	YAKIMA RACK	HITCH CLASS I 1.25" HITCH WITH STOP	HITCH CLASS II 1.25" HITCH NO STOP	HITCH CLASS III/IV 2" HITCH
TILT	FullTilt 4/5	*	✓	✓
	RidgeBack 2/4/5	*	✓	✓
	HighLite 2/3, Silver	*	✓	✓
	DoubleDown 4		✓	✓
	KingPin			✓
SWING	FullSwing			✓
	SwingDaddy			✓
TRAY	HoldUp 2"			✓
	HoldUp 1-1/4"		✓	
	FourTimer			✓
	TwoTimer	*	✓	✓

*Due to variations in Class I hitch receivers, some Class I receivers may not be able to accept this product.

HITCH SIZE & CLASS INFORMATION

1.25" receivers are class I or II.

2" receivers are class III or IV.

Class I hitches are rated for a 2000 lb pull weight and a 200 lb tongue weight.
(We are concerned with the tongue weight.)

Class II hitches are rated for a 3500 lb pull weight and 350 lb tongue weight.
(We are concerned with the tongue weight.)

To ensure that Class II (heavier) accessories are not used in Class I receivers, Class I receivers are generally built with an internal "stop" to prevent the longer Class II accessories from being used. Not all, but most, common Class I receivers are built with this "stop" feature.

For more information regarding your hitch, please consult an automotive professional or contact the hitch manufacturer.

HITCH FIT TIPS
GETTING THE PERFECT FIT

5 CHECK THE HITCH FIT

Yakima designs products with the goal of fitting all vehicles. Our engineers do such a good job at this that Yakima hitch products fit the vast majority of cars with no issues at all.

Just to be certain, we have included this handy guide to ensure that Yakima hitch products will fit your car. If you have any questions or concerns, visit your local dealer to “try on” a Yakima rack.

CHECK YOUR DEPTH

To ensure proper fit, it's important to know the depth of your receiver. Determine this by doing the following:

- With a ruler inserted in the receiver, measure from the center of the hitch mounting hole to the point where you make contact with an obstacle. This is Fit Measurement A.
- If you do not contact a back-stop or your hitch receiver does not have a backstop, another potential point of contact could be an undercarriage-mounted spare tire or the undercarriage itself.
- Using the table below, compare your measurement to see which hitch racks will work with your vehicle. Your Fit Measurement A must be equal to or greater than the product measurement listed in the table below for a proper fit.

GREATER THAN OR EQUAL TO THIS MEASUREMENT FITS

YAKIMA RACK	FIT MEASUREMENT A
DOUBLEDOWN	1.6" Min.
DOUBLEDOWN ACE	1.6" Min.
FOURTIMER	2" Min.
FULLSWING	1.5" Min.
FULLTILT 4/5	3" Min.
HIGHLITE	2.5" Min.
HOLDUP 1.25"	2" Min.
HOLDUP 2"	3" Min.
KINGPIN	1.5" Min.
RIDGEBACK 2/4/5	1.5" Min.
STICKUP	2" Min.
SWINGDADDY	3" Min.
TWOTIMER	2" Min.

FIT MEASUREMENT A

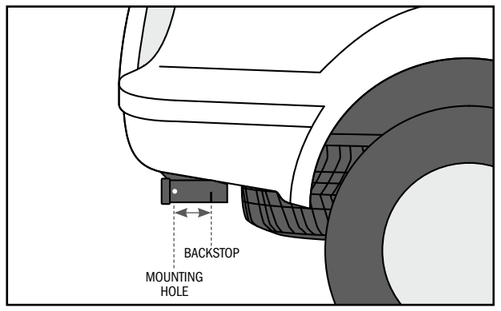

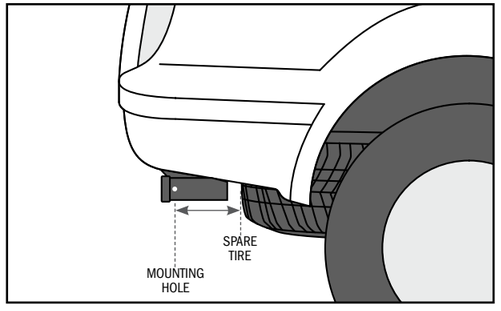

CHECK YOUR BUMPER

Make sure your bumper will not interfere with the Yakima hitch rack. Measure the distance from the center of the mounting hole on your hitch to the end of your bumper. This is Fit Measurement B.

Your Fit Measurement B must be equal to or less than the product measurement listed in the table below for a proper fit.

LESS THAN OR EQUAL TO THIS MEASUREMENT FITS

YAKIMA RACK	FIT MEASUREMENT B
DOUBLEDOWN	9" Max.
DOUBLEDOWN ACE	9" Max.
FOURTIMER	7" Max.
FULLSWING	6.5" Max.
FULLTILT 4/5	9" Max.
HIGHLITE	8.5" Max.
HOLDUP 1.25"	10" Max.
HOLDUP 2"	9" Max.
KINGPIN	6" Max.
RIDGEBACK 2/4/5	7.5" Max.
SWINGDADDY	6.5" Max.
STICKUP	7.5" Max.
TWOTIMER	7" Max.

FIT MEASUREMENT B

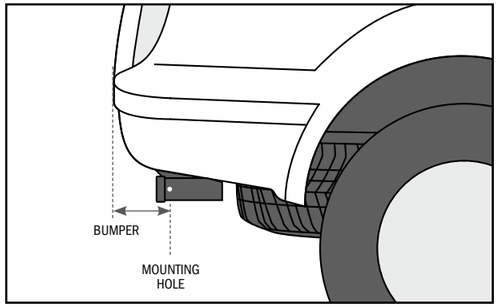

CHECK YOUR SPARE TIRE

If you have a spare tire on the back of your vehicle it may interfere with the installation of your Yakima hitch rack. Measure the distance from the center of the mounting hole on your hitch receiver to the end of your spare tire. This is Fit Measurement C.

Your Fit Measurement C must be equal to or less than the product measurement listed in the table below for a proper fit.

LESS THAN OR EQUAL TO THIS MEASUREMENT FITS

YAKIMA RACK	FIT MEASUREMENT C
DOUBLEDOWN	8.5" Max.
DOUBLEDOWN ACE	8.5" Max.
FOURTIMER	7" Max.
FULLSWING	9.5" Max.
FULLTILT 4/5	10.5" Max.
HIGHLITE	8" Max.
HOLDUP 1.25"	9.5" Max.
HOLDUP 2"	8.5" Max.
KINGPIN	10.5" Max.
RIDGEBACK 2/4/5	10.5" Max.
STICKUP	4.6" Max.
SWINGDADDY	9.5" Max.
TWOTIMER	7" Max.

FIT MEASUREMENT C

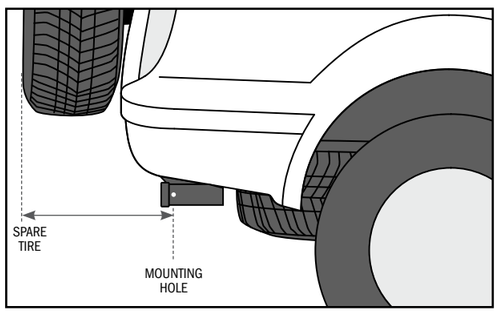

HITCH FIT TIPS

GETTING THE PERFECT FIT

CHECK YOUR PIN HOLE DEPTH

If you have selected a RidgeBack bicycle rack, you will need to measure the depth of your receiver's mounting hole to determine which of the pin mounting holes on your RidgeBack's tongue to use.
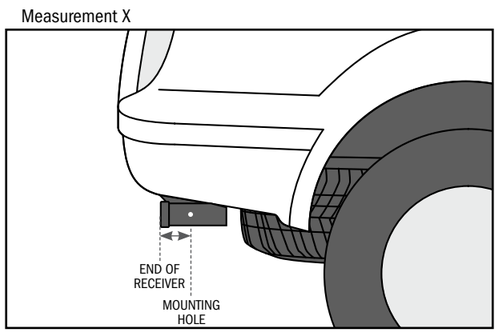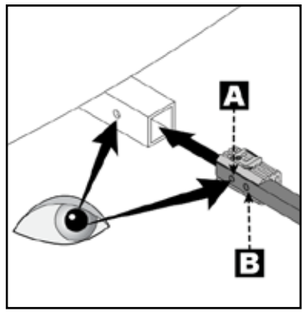
- If Measurement X is between 1 1/2" and 2 3/8" wide, use pin hole A
- If Measurement X is greater than 2 3/8", use pin hole B
- If Measurement X is less than 1 1/2", it is considered not to be a fit